luna10-PC

The **luna10-PC** reflects timeless design and convinces due to its performant hardware for building automation. The bicolor-LED at the front is configurable for different applications, for example to view a missed door call.

tci ambiento

solutions connecting people with technology

Technical Data

- 10“ multitouch panel with continuous glass surface, 1024 x 600, 430 cd/m²
- tci-Baseboard Intel Atom “Bay Trail” Dual Core CPU E3827
- 2x 1,75GHz, Intel HD4000
- SSD
- integrated bicolor LED
- ICOM: composite unit with integrated echo compensation for full-duplex audio communication
- PoE+: IEEE 802.3at™
- Dual Gigabit Ethernet
- 2x USB2.0
- 1x RS-232Betriebstemperatur: 0 bis 35°C
- working temperature: 0 up to 35°C
- storage temperature: -20 up to 60°C
- relative humidity: 10 up to 80%, not condensing
- power input:
  24VDC +/- 10%,
  PoE+ (Power-over-Ethernet)

Installation Variants

EPG

UPG

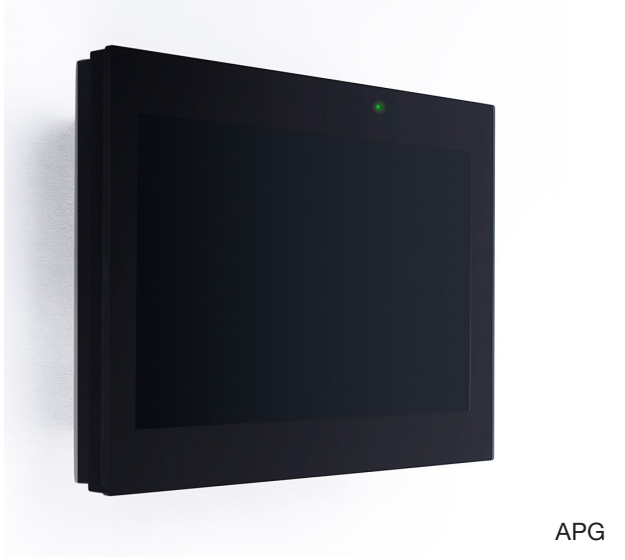

APG

KTG

*37793	10.1“ LED display, 380cd/m², LVDS, 1024*600 + PCAP touch screen bonded, 3mm cover glass
*4751	BaseBoard PB for Q7, V3.0 and Q7 CPU core module, Intel Atom Dual Core E3827 1.75GHz, 4GB RAM, Std. Temp., graphic Intel HD 4000, passiv heatsink I/O external: 2xUSB-A (1x USB2.0, 1xUSB3.0), 3.5mm stereo plug (Line-Out), 1x RS-232 (COM1), 2x Gigabit Ethernet, supports optional KNX interface, DCIn 18~36VDC
*35550	Power over Ethernet Modul - IEEE 802.3af (PoE for VI.r2 and XS systems) - IEEE 802.3at (PoE+ for VI.r3/VI.r4 and PC systems)
*36348	BBoardKNX: Interface-Board, installation-bus KNX, galvanically isolated, USB (Typ. B) firmware supporting protocol EMI1
*38109	housing for 10“ luna-PC.r3 system - reset - Micro-USB - design: black
*39014	luna-SSD: 64GB SSD
*40085	operating system image for Windows 10 IoT, 64 bit - LTSC - English installed (German, French, Italian, Spanish, Russian available) - recovery over FTP support
*38086	ICOM: intercom unit for hands-free talking with hardware module for acoustic echo cancellation
*29774	FlatClientPC-Ext: Contatto Flat Client Extended for operating on a tci touch screen, PC based - Audio- und Videokommunication over VoIP/SIP and video- streaming
*33364	speaker for luna series
*40241	luna series accessories: - assembly screw - assembly tool - ferrite - USB adaptor cable
*14873	PRVC-BASIS-BBoard: PreVision Control Basis - for Win7 und Win10 - for PB V3.0 + E3827 Intel Atom - Condition Monitoring for temperature, HDD - MMI-Software - 32/64 Bit support
14939	Product label for device luna10-PC.r3
*34818	manual for tci - building automation
*37820	Final acceptance

Accessory

*38556	UPG10(b): in-wall-chassis, black
*34287	EPG10(b): slim type in-wall chassis for flush mounting, black
*37435	APG10(b): chassis for installation on the wall, black
*37832	KTG10(b): chassis for conference touch panel, black
Optional Accessory	
*32779	lunaMONT: mounting kit for in-wall-chassis
9255	ambientoNT-Hut-24V-18W: rail power supply, 24VDC, 100-240VAC, max. 0.75A
8447	ambientoNT-Hut-24V-100W: rail power supply, 24VDC, 88-264VAC, max. 4.2A

Connections

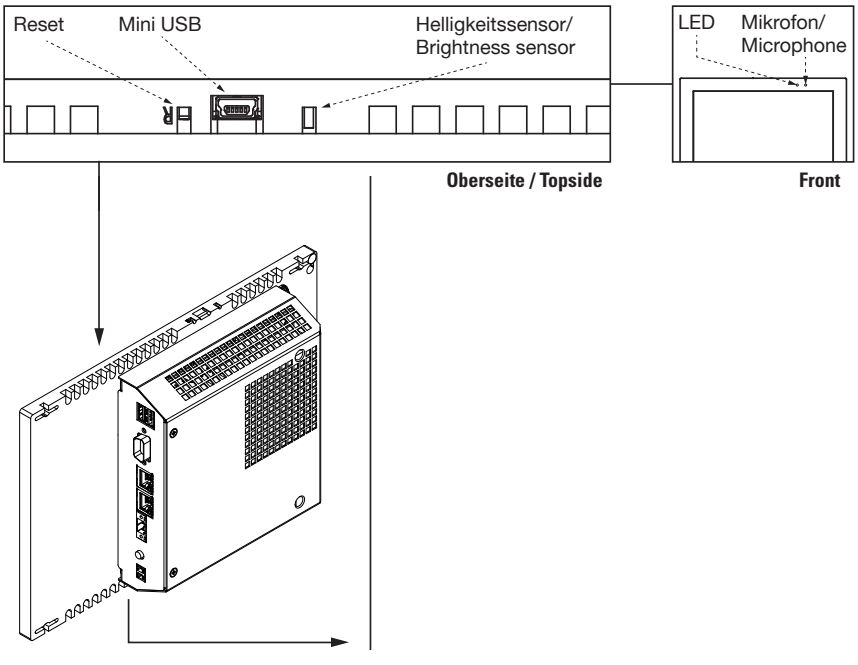

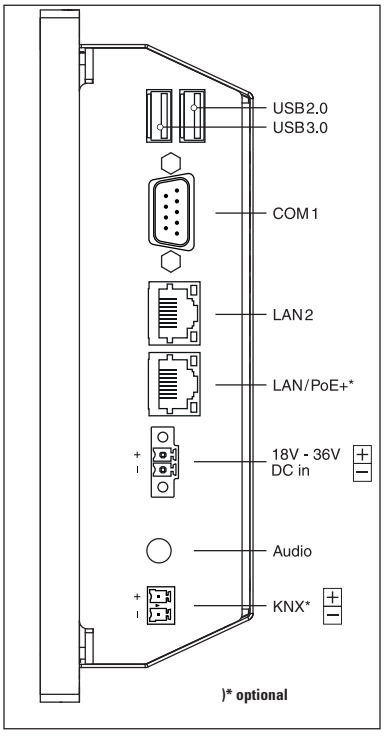

Anschlussfeld / Connectors panel

Power Consumption

Operating Status	P in W
Working at full load	15,6
Operating at idle loop	9,1
Working, display off	5,3
Standby	1,1
Shutdown	0,9

Unten / Bottom

Front

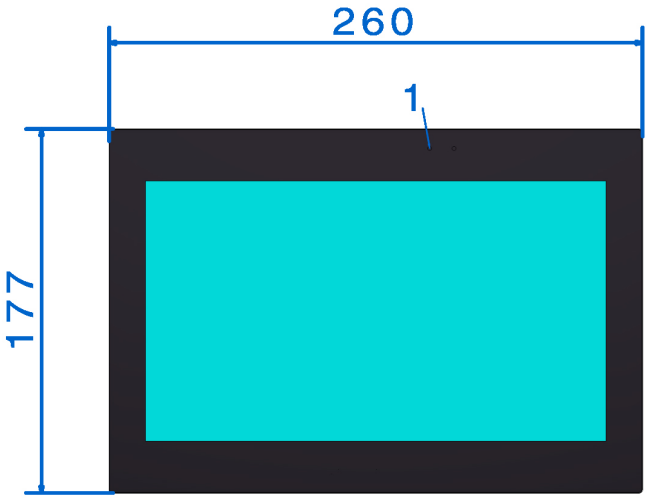

Seite / Side

Oben / Top

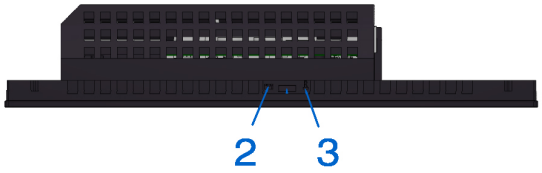

1 LED
2 Helligkeitssensor / brightness sensor
3 Reset
4 Temperatursensor / temperature sensor

luna10
13.11.2018
Rev. 1.1

Drawings Installation

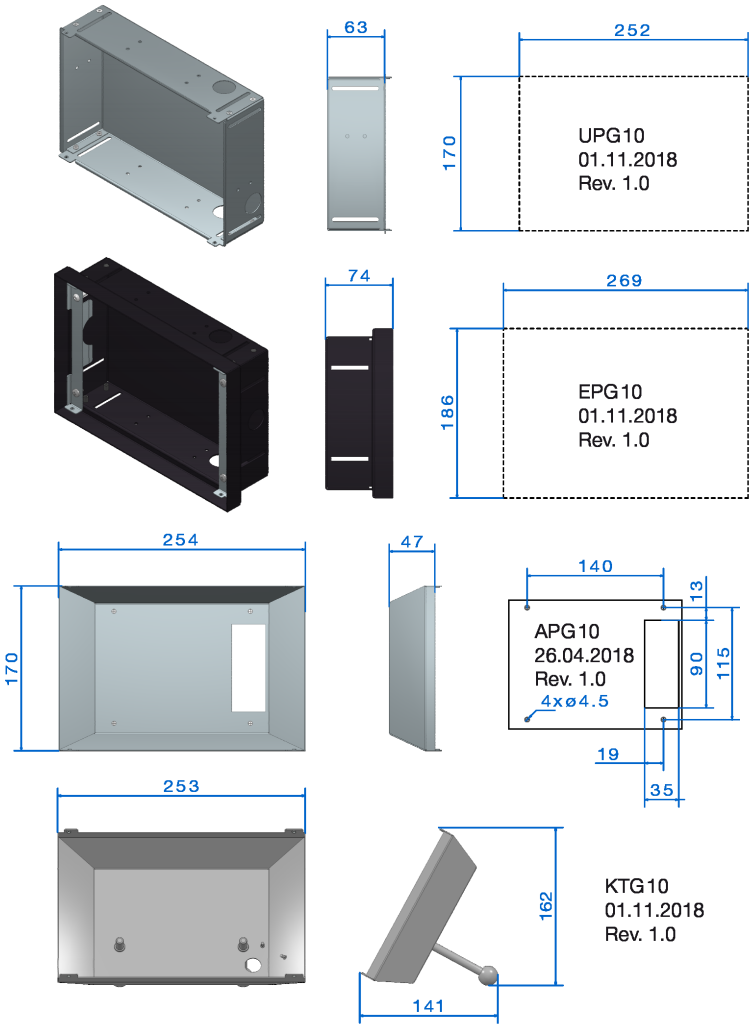

Alle Angaben in Millimeter
All dimensions in millimeter

Certificates/Certified Apps

Subject to change of design, construction and technical data without prior notice. Delivery possibilities, changes and errors excepted. Definitions of the performance data can be found at www.ambiento.de. All brand or product names are trademarks and/or registered trademarks of their respective owners. Unless expressly permitted, the rights herein are reserved. The screenshots in this catalogue are simulated. The visualization software is not part of the system.

solutions connecting people with technology

state 06/2020 rj

Ludwig-Rinn-Strasse 10-14 • D-35452 Heuchelheim/Gießen Germany • Phone +49 (0) 6 41 - 9 62 84 -0 •
Fax: +49 (0) 6 41 - 9 62 84 -28 • info@ambiento.de • www.ambiento.de